Vehicle History Report

VEHICLE DETAILS

Chassis number [1]:	WP1ZZZ95ZGLB90325
Manufacture date:	2015
Make:	PORSCHE
Model:	MACAN
Body:	DBA-95BCTLA
Grade:	MACAN TURBO
Engine:	CTL
Drive:	4WD
Transmission:	AT

Title information [2]:	**Deregistered to Export**
Accident / Repair:	**No problem**
Odometer rollback:	**No problem**
Manufacturer recall:	**No problem**
Safety grade [3]:	**No data**
Contamination risk:	**No problem**

This CAR VX Vehicle History Report is based only on Information supplied to CAR VX, LTD and available as of 2025-11-06 20:43:52. Other information about this vehicle, including problems, may not have been reported to CAR VX, LTD . Use this report as one important tool, along with a vehicle inspection and test drive, to make a better decision about your next used car.

ACCIDENT / REPAIR HISTORY

Problem type	Reported	Date reported	Data source	Details	Airbag
Collision	Not reported				
Malfunction	Not reported				
Theft	Not reported				
Fire damage	Not reported				
Water damage	Not reported				
Hail damage	Not reported				

ODOMETER READINGS HISTORY

Date reported	Data source	Odometer reading (Km)
2022-08-17	MLIT	60500
2024-03-19	USS Yokohama	69999
2024-08-30	MLIT	71600
2025-10-16	USS Tokyo	81190

USE HISTORY

Use in the contaminated regions [4]	Radioactive contamination test fail [5]	Commercial use
Not reported	Not reported	Not reported

DETAILED HISTORY

Event date	Location	Odometer reading (Km)	Data source	Details
2015			PORSCHE	Manufactured
2015-08			MLIT	First registration
2022-08-17		60500	MLIT	Inspection
2024-03-19	Kanagawa	69999	USS Yokohama	Auctioned

2024-08-30	Fukuoka	71600	MLIT	Inspection
2025-10-16	Chiba	81190	USS Tokyo	Auctioned
2025-10-22	Fukuoka		MLIT	Last registration

MANUFACTURER RECALL HISTORY

Date reported	Data source	Affected part	Details

Not reported

VEHICLE ASSESSMENT [6]

Overall Collision Safety Ratings

Driver's seat			Front passenger's seat		
Points	Evaluation	Goal average	Points	Evaluation	Goal average
0		0%	0		0%

* In order to accurately differentiate between the evaluations of different vehicles, a standard is set based on current technology. Up to 6 points out of 12 is given level 1 and the rest of the range is divided up into equal parts, which are respectively assigned to level 2 (more than 6 points but 7.5 or less), level 3 (more than 7.5 points but 9 or less), level 4 (more than 9 points but 10.5 or less) or level 5 (more than 10.5 points).

Braking performance tests [7]

Dry road

Wet road

VEHICLE SPECIFICATION

1st gear ratio	**2nd gear ratio**
3rd gear ratio	**4th gear ratio**
5th gear ratio	**6th gear ratio**
Additional notes	**Airbag position, capacity**

Body rear overhang		**Body type**	SUV
Chassis number embossing position		**Classification code**	3202
Cylinders		**Displacement**	3600
Electric engine type		**Electric engine maximum output**	
Electric engine maximum torque		**Electric engine power**	
Engine maximum power	400ps(294kW)/6000rpm	**Engine maximum torque**	56.1kg· m(550N· m)/1350～4500rpm
Engine model	CTL	**Frame type**	
Front shaft weight	1140	**Front shock absorber type**	
Front stabilizer type		**Front tires size**	235/55R19
Front tread	1655	**Fuel consumption**	
Fuel tank equipment	75	**Grade**	MACAN TURBO
Height	161	**Length**	470
Main brakes type		**Make**	PORSCHE
Maximum speed		**Minimum ground clearance**	
Minimum turning radius	5.5	**Model**	MACAN
Model code	DBA-95BCTLA	**Mufflers number**	
Rear shaft weight	890	**Rear shock absorber type**	
Rear stabilizer type		**Rear tires size**	255/50R19
Rear tread	1660	**Reverse ratio**	
Riding capacity	5	**Side brakes type**	
Specification code	17952	**Stopping distance**	
Transmission type	AT	**Weight**	2030
Wheel alignment	4WD	**Wheelbase**	2810
Width	192		

AUCTION DATA

Date: 2024-03-19, Auction: USS Yokohama, Lot #: 84075

Date:	2024-03-19	Lot #:	84075
Auction name:	USS Yokohama	Region:	Kanagawa
Make:	PORSCHE	Model:	MACAN
Reg. year:	2015	Mileage (km):	69999
Displacement (cc):	3600	Transmission:	FA
Color:	GRAY	Model code:	95BCTLA
Result:	available	Auction grade:	4.5
Problem type:	No problem	Problem scale:	None
Contaminated:	No	Airbag:	OK

Date: 2025-10-16, Auction: USS Tokyo, Lot #: 75435

Date:	2025-10-16	Lot #:	75435
Auction name:	USS Tokyo	Region:	Chiba
Make:	PORSCHE	Model:	MACAN
Reg. year:	2015	Mileage (km):	81190
Displacement (cc):	3600	Transmission:	FA
Color:	GRAY	Model code:	95BCTLA
Result:	available	Auction grade:	4.5
Problem type:	No problem	Problem scale:	None
Contaminated:	No	Airbag:	OK

PHOTOS AND AUCTION SHEETS

プレミア輸入車コーナー

84075	車種	排気量 3600	型式 DBA-95BCTLA	評価点 45
	初度登録年月 27/8月	車名 ポルシェ	型式/7型 5	グレード マカンターボ スポーツクロノPKG 2WD 4WD
				内装 B

車検 R6年 9月	シフト FAT	特別 S R / 時 AW / P S / P W / カ ア / T V / ナ ビ / エ ア	
走行 69,999 ㎞	冷房 AAC		
外色 元色 灰 色番 カラー No.	内装		
燃料 ガソリン・軽油・( ) 内装色			
車両	輸入区分 ディーラー・並行 ハンドル 左・右		
	名義変更期限 月 日		

セールスポイント
- ユーザー登録 ・21インチAW
- ライトコンフォートPKG ・バックカメラ
- カーボンインテリアPKG ・ACC
- パノラマルーフシステム
- PDLS付きキセノンヘッドライト
- ポルシェエントリー&ドライブシステム
- ルクソールベージュレザーインテリア
- PASMエアサスペンション
- シートヒーター ・ベンテレーター

リサイクル関係金 27510円	標準定員 5人	積載量 1	登録No. 品川 346 に 728	
			車台No. WP1ZZZ95ZQLB90325	
			シリアルNo.	

○注意事項 (修理・不具合箇所および状態等)
- 保証書、取扱、スペアキー 後述

○検査員報告 (USS使用欄)

ハンドル・コードスイ
ハーレーセ 摩擦
ボーンタ

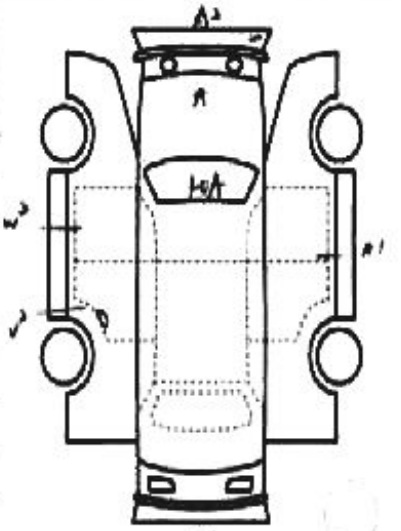

(荷台内寸)約 × × (cm)

長さ 470 cm 幅 192 cm 高さ 161 cm ←(車両図上の寸法)

輸入車プライムコーナー

No.	車歴	排気量	型式	評価点
75435		3600	DBA-95BCTLA	4.5

初度登録年月	車名	型式・ドア数	グレード	駆動	内装
H27/8月	ポルシェ マカン	5D	マカンターボ	4WD	B

車検	R8年 9月 6日	シフト	FAT
走行	81,190 km	冷房	WAAC
外色	元色 グレー → 色替	カラーNo.	M7S
燃料	ガソリン	内装色	ベージュ系
輸入車用	年式 2016	輸入区分 ディーラー	ハンドル 右
装備	有	装備者保有効期限	月 日

補正部				
SR	純AW	PS	PW	
カワ	TV	ナビ	エアB	

セールスポイント
★ユーザー仕入れ！
★ACC, BSM, LKA★パワーバックドア
★パノラミックスライディングルーフ
★カーボンインパネ&ドアトリム
★カーボンステアリング
★ベンチレーション&シートヒーター

リサイクル預託金	27,510円	乗車定員 5人	最大積載量 t

登録No.	熊谷	335	た	2200
車台No.	WP1ZZZ95ZGLB90325			
シリアルNo.				

○注意事項（修復・不具合箇所および状態等）
★スポーツクロノPKG★PASM★エントリードライブ
★BOSEサウンド★21インチターボデザインAW
★純正ナビ、フルセグ★27.28.30.R3.5.6記録簿
★18WAYメモリー付パワーシート
保/取/メンテ/スペアキー後送

○検査員報告
ハンドル，シートスレ
ルーム内汚れ
荷室スレ
ホイールキズ
各キズ凹

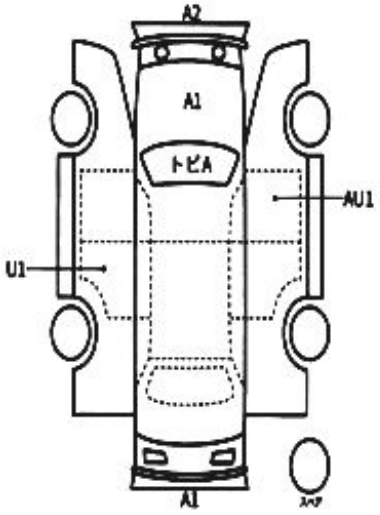

荷台内寸	約 × × (cm)		
長さ 470 cm	幅 192 cm	高さ 161 cm	

GLOSSARY

[1] **Chassis number** – a unique identification number of the vehicle in Japan (same as VIN in the USA or Europe)

[2] **Title information:**
Registered – qualified for driving in Japan
Deregistered Temporarily – not qualified for driving in Japan, usually a temporary title during the ownership change
Deregistered Completely – not qualified for driving in Japan, the vehicle is determined to be scrapped
Deregistered to Export – not qualified for driving in Japan , the vehicle is determined to be exported

[3] **Determining the overall collision safety performance evaluation** – For the driver's seat, the results of the full-wrap frontal collision test, offset frontal collision test, and side collision test are added together and evaluated to 6 different levels. For the Frontal passenger's seat, the results of the full-wrap frontal collision test and the side collision test (results for the driver's or the front passenger's seat are used) are added together and evaluated to 6 different levels.

Regular vehicle inspection – All vehicles in Japan must undergo regular vehicle inspections (shaken). New cars need to be tested after three years, and then vehicles must be tested every two years thereafter. A vehicle inspection (shaken) is compulsory for all vehicles with an engine size over 250cc. It ensures that all vehicles on the road are properly maintained and safe to drive. The test also checks that vehicles have not been illegally modified; if they are found to have been modified, they are not allowed on the road.

[4] **Use in the contaminated regions** – The Fukushima Daiichi nuclear disaster was a catastrophic failure at the Fukushima I Nuclear Power Plant on 11 March 2011, resulting in a meltdown of three of the plant's six nuclear reactors. As a result, some areas in the following prefectures were contaminated: Fukushima, Miyagi, Ibaraki, Tochigi.

[5] **Radioactive contamination test** – radioactive contamination inspection that was started in July 2011 as a preventive measure for exporting contaminated vehicles from Japan. The inspection is being conducted since in all sea ports of Japan under the supervision of The Japan Harbor Transportation Association (JHTA).

MLIT – Ministry of Land, Infrastructure, Transport and Tourism.

[6] **Japan New Car Assessment Program** – the Ministry of Land, Infrastructure, Transport and Tourism (MLIT) and the National Agency for Automotive Safety & Victims' Aid (NASVA) have taken measures for safety, one of which is to assess commercially available vehicles through a variety of safety performance tests and release the resulting information compiled into the "New Car Assessment Program". The objective of Japan New Car Assessment Program is to increase the use of safe automobiles by providing an environment in which users can easily select such vehicles. This also promotes the development of safer vehicles by automobile manufacturers. Neck injury protection for rear-end collision performance test , rear seat passenger's protection for frontal collision performance test, rear passenger's seat belt usability evaluation test and seat belt reminder for passengers evaluation test are started in FY2009.

[7] **Braking Performance Tests** – Braking performance is determined by the shortness of the distance in which a vehicle can stop and the stability of the vehicle at the time of braking. This test is performed under wet and dry road conditions for a vehicle which has both a driver and a front passenger. The distance it takes for the vehicle to stop and the stability of the vehicle at the time of braking is evaluated for when the vehicle is stopped abruptly while traveling at a speed of 100km/h. The stopping distance and vehicle speed have been measured by using GPS since FY2009.

CAR VX, LTD DEPENDS ON ITS SOURCES FOR THE ACCURACY AND RELIABILITY OF ITS INFORMATION. THEREFORE, NO RESPONSIBILITY IS ASSUMED BY CAR VX, LTD OR ITS AGENTS FOR ERRORS OR OMISSIONS IN THIS REPORT. CAR VX, LTD FURTHER EXPRESSLY DISCLAIMS ALL WARRANTIES, EXPRESSED OR IMPLIED, INCLUDING ANY IMPLIED WARRANTIES OF MERCHANTABILITY OR FITNESS FOR A PARTICULAR PURPOSE.

© 2014-2025 Car VX Limited. All rights reserved.