Vehicle History Report

VEHICLE DETAILS

Chassis number [1]:	RC1-1000322
Manufacture date:	2013-10-14
Make:	HONDA
Model:	ODYSSEY
Body:	DBA-RC1
Grade:	ABSOLUTE EX
Engine:	K24W
Drive:	2WD
Transmission:	AT

Title information [2]:	**Deregistered to Export**	✓
Accident / Repair:	**No problem**	✓
Odometer rollback:	**No problem**	✓
Manufacturer recall:	**No problem**	✓
Safety grade [3]:	★★★★★★	✓
Contamination risk:	**No problem**	✓

This CAR VX Vehicle History Report is based only on Information supplied to CAR VX, LTD and available as of 2026-10-24 22:24:53. The information may vary depending on the data received from our data providers. Some data may be incomplete or unavailable due to human error, information that was not digitized at the time, or data that was simply not reported to the databases. This report should be used as a decision-support tool alongside a vehicle inspection and test drive.

ACCIDENT / REPAIR HISTORY

Problem type	Reported	Date reported	Data source	Details	Airbag
Collision	Not reported				
Malfunction	Not reported				
Theft	Not reported				
Fire damage	Not reported				
Water damage	Not reported				
Hail damage	Not reported				

ODOMETER READINGS HISTORY

Date reported	Data source	Odometer reading (Km)
2023-06-06	MLIT	87400
2025-05-30	MLIT	107600
2026-10-10	USS HAA Kobe	118312

USE HISTORY

Use in the contaminated regions [4]	Radioactive contamination test fail [5]	Commercial use
Not reported	Not reported	Not reported

DETAILED HISTORY

Event date	Location	Odometer reading (Km)	Data source	Details
2013-10-14			HONDA	Manufactured
2014-06			MLIT	First registration
2023-06-06		87400	MLIT	Inspection
2025-05-30	Hiroshima	107600	MLIT	Inspection
2026-10-05	Hiroshima		MLIT	Last registration

2026-10-10	118312	USS HAA Kobe	Auctioned

MANUFACTURER RECALL HISTORY

Date reported	Data source	Affected part	Details
Not reported			

VEHICLE ASSESSMENT [6]

Overall Collision Safety Ratings

Driver's seat			Front passenger's seat		
Points	Evaluation	Goal average	Points	Evaluation	Goal average
32.88	★★★★★★	91%	23.22	★★★★★★	97%

* In order to accurately differentiate between the evaluations of different vehicles, a standard is set based on current technology. Up to 6 points out of 12 is given level 1 and the rest of the range is divided up into equal parts, which are respectively assigned to level 2 (more than 6 points but 7.5 or less), level 3 (more than 7.5 points but 9 or less), level 4 (more than 9 points but 10.5 or less) or level 5 (more than 10.5 points).

Braking performance tests [7]

Dry road		40.1 m
Wet road		43.1 m

VEHICLE SPECIFICATION

1st gear ratio	**2nd gear ratio**	
3rd gear ratio	**4th gear ratio**	
5th gear ratio	**6th gear ratio**	
Additional notes	**Airbag position, capacity**	
Body rear overhang	**Body type**	MV&1BOX

Chassis number embossing position		**Classification code**	48
Cylinders		**Displacement**	2350
Electric engine type		**Electric engine maximum output**	
Electric engine maximum torque		**Electric engine power**	
Engine maximum power	190ps(140kW)/6400rpm	**Engine maximum torque**	24.2kg· m(237N· m)/4000rpm
Engine model	K24W	**Frame type**	
Front shaft weight	1000	**Front shock absorber type**	MCPHERSON
Front stabilizer type		**Front tires size**	225/45R18 91W
Front tread	1560	**Fuel consumption**	
Fuel tank equipment	55	**Grade**	ABSOLUTE EX
Height	168	**Length**	483
Main brakes type		**Make**	HONDA
Maximum speed		**Minimum ground clearance**	
Minimum turning radius	5400	**Model**	ODYSSEY
Model code	DBA-RC1	**Mufflers number**	
Rear shaft weight	830	**Rear shock absorber type**	AXLE TYPE
Rear stabilizer type		**Rear tires size**	225/45R18 91W
Rear tread	1560	**Reverse ratio**	1.858 ~1.264
Riding capacity	7	**Side brakes type**	
Specification code	17637	**Stopping distance**	
Transmission type	AT	**Weight**	1720
Wheel alignment	2WD	**Wheelbase**	2900
Width	182		

AUCTION DATA

Date: 2026-10-10, Auction: USS HAA Kobe, Lot #: 35256

Date:	2026-10-10	Lot #:	35256
Auction name:	USS HAA Kobe	Region:	
Make:	HONDA	Model:	ODYSSEY
Reg. year:	2014	Mileage (km):	118312
Displacement (cc):	2400	Transmission:	IA
Color:	BLACK	Model code:	RC1
Result:	available	Auction grade:	4
Problem type:	No problem	Problem scale:	None
Contaminated:	No	Airbag:	OK

PHOTOS AND AUCTION SHEETS

GOプライムコーナー

35256	車型(自家用以外は記入)	排気量 2400	型式 DBA-RC1		評価点 4
	初度登録年月 H26/6月	車名 ホンダ オデッセイ	型式・ドア数 5D	グレード アブソルート・EX	駆動 2WD
					内装 B

車検 年 月 日	シフト IAT	利正品 SR 純AW PS PW カワ TV ナビ エアB	
走行 118,312 km	冷房 AAC	セールスポイント ナビゲーション 全方囲カメラ ETC 両側オートスライドドア	
外色 元色 クロ → 色値 カラーNo. NH820P	無		
燃料 ガソリン 内装色			
輸入車用 年式 輸入区分 ハンドル	月 日		
リサイクル預託金 14,420円	乗車定員 7人	最大積量 t	登録No.
			車台No. RC1-1000322
			シリアルNo.

○注意事項(診断・不具合箇所および状態等)

リヤワイパーアーム欠品

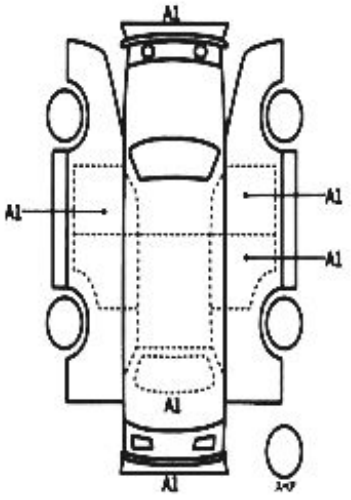

○検査員報告

ルーム内一部汚れキズ

小キズ小凹

外装くすみ

[荷台内寸]約 × × (cm)

長さ cm	幅 cm	高さ cm

GLOSSARY

[1] **Chassis number** – a unique identification number of the vehicle in Japan (same as VIN in the USA or Europe)

[2] **Title information:**
Registered – qualified for driving in Japan
Deregistered Temporarily – not qualified for driving in Japan, usually a temporary title during the ownership change
Deregistered Completely – not qualified for driving in Japan, the vehicle is determined to be scrapped
Deregistered to Export – not qualified for driving in Japan , the vehicle is determined to be exported

[3] **Determining the overall collision safety performance evaluation** – For the driver's seat, the results of the full-wrap frontal collision test, offset frontal collision test, and side collision test are added together and evaluated to 6 different levels. For the Frontal passenger's seat, the results of the full-wrap frontal collision test and the side collision test (results for the driver's or the front passenger's seat are used) are added together and evaluated to 6 different levels.

Regular vehicle inspection – All vehicles in Japan must undergo regular vehicle inspections (shaken). New cars need to be tested after three years, and then vehicles must be tested every two years thereafter. A vehicle inspection (shaken) is compulsory for all vehicles with an engine size over 250cc. It ensures that all vehicles on the road are properly maintained and safe to drive. The test also checks that vehicles have not been illegally modified; if they are found to have been modified, they are not allowed on the road.

[4] **Use in the contaminated regions** – The Fukushima Daiichi nuclear disaster was a catastrophic failure at the Fukushima I Nuclear Power Plant on 11 March 2011, resulting in a meltdown of three of the plant's six nuclear reactors. As a result, some areas in the following prefectures were contaminated: Fukushima, Miyagi, Ibaraki, Tochigi.

[5] **Radioactive contamination test** – radioactive contamination inspection that was started in July 2011 as a preventive measure for exporting contaminated vehicles from Japan. The inspection is being conducted since in all sea ports of Japan under the supervision of The Japan Harbor Transportation Association (JHTA).

MLIT – Ministry of Land, Infrastructure, Transport and Tourism.

[6] **Japan New Car Assessment Program** – the Ministry of Land, Infrastructure, Transport and Tourism (MLIT) and the National Agency for Automotive Safety & Victims' Aid (NASVA) have taken measures for safety, one of which is to assess commercially available vehicles through a variety of safety performance tests and release the resulting information compiled into the "New Car Assessment Program". The objective of Japan New Car Assessment Program is to increase the use of safe automobiles by providing an environment in which users can easily select such vehicles. This also promotes the development of safer vehicles by automobile manufacturers. Neck injury protection for rear-end collision performance test , rear seat passenger's protection for frontal collision performance test, rear passenger's seat belt usability evaluation test and seat belt reminder for passengers evaluation test are started in FY2009.

[7] **Braking Performance Tests** – Braking performance is determined by the shortness of the distance in which a vehicle can stop and the stability of the vehicle at the time of braking. This test is performed under wet and dry road conditions for a vehicle which has both a driver and a front passenger. The distance it takes for the vehicle to stop and the stability of the vehicle at the time of braking is evaluated for when the vehicle is stopped abruptly while traveling at a speed of 100km/h. The stopping distance and vehicle speed have been measured by using GPS since FY2009.

CAR VX, LTD DEPENDS ON ITS SOURCES FOR THE ACCURACY AND RELIABILITY OF ITS INFORMATION.

THEREFORE, NO RESPONSIBILITY IS ASSUMED BY CAR VX, LTD OR ITS AGENTS FOR ERRORS OR OMISSIONS IN THIS REPORT. CAR VX, LTD FURTHER EXPRESSLY DISCLAIMS ALL WARRANTIES, EXPRESSED OR IMPLIED, INCLUDING ANY IMPLIED WARRANTIES OF MERCHANTABILITY OR FITNESS FOR A PARTICULAR PURPOSE.

© 2014-2026 Car VX Limited. All rights reserved.