Vehicle History Report

VEHICLE DETAILS

Chassis number [1]:	AGH30-0067626
Manufacture date:	2016-03
Make:	TOYOTA
Model:	VELLFIRE
Body:	DBA-AGH30W
Grade:	Z A EDITION
Engine:	2AR-FE
Drive:	2WD
Transmission:	AT

Title information [2]:	**Deregistered to Export**	✓
Accident / Repair:	**No problem**	✓
Odometer rollback:	**No problem**	✓
Manufacturer recall:	**No problem**	✓
Safety grade [3]:	★★★★	✓
Contamination risk:	**No problem**	✓

This CAR VX Vehicle History Report is based only on Information supplied to CAR VX, LTD and available as of 2026-10-24 22:23:14. The information may vary depending on the data received from our data providers. Some data may be incomplete or unavailable due to human error, information that was not digitized at the time, or data that was simply not reported to the databases. This report should be used as a decision-support tool alongside a vehicle inspection and test drive.

ACCIDENT / REPAIR HISTORY

Problem type	Reported	Date reported	Data source	Details	Airbag
Collision	Not reported				
Malfunction	Not reported				
Theft	Not reported				
Fire damage	Not reported				
Water damage	Not reported				
Hail damage	Not reported				

ODOMETER READINGS HISTORY

Date reported	Data source	Odometer reading (Km)
2023-04-03	MLIT	76900
2025-03-18	MLIT	97600
2026-09-29	TAA Kyushu	117212
2026-10-10	USS Kyushu	117212

USE HISTORY

Use in the contaminated regions [4]	Radioactive contamination test fail [5]	Commercial use
Not reported	Not reported	Not reported

DETAILED HISTORY

Event date	Location	Odometer reading (Km)	Data source	Details
2016-03			TOYOTA	Manufactured
2016-04			MLIT	First registration
2023-04-03		76900	MLIT	Inspection
2025-03-18	Fukuoka	97600	MLIT	Inspection

2026-09-29	Fukuoka	117212	TAA Kyushu	Auctioned
2026-10-10	Saga	117212	USS Kyushu	Auctioned
2026-10-19	Fukuoka		MLIT	Last registration

MANUFACTURER RECALL HISTORY

Date reported	Data source	Affected part	Details
Not reported			

VEHICLE ASSESSMENT [6]

Overall Collision Safety Ratings

Driver's seat			Front passenger's seat		
Points	Evaluation	Goal average	Points	Evaluation	Goal average
10.73	★★★★★	90%	10.76	★★★★★	90%

* In order to accurately differentiate between the evaluations of different vehicles, a standard is set based on current technology. Up to 6 points out of 12 is given level 1 and the rest of the range is divided up into equal parts, which are respectively assigned to level 2 (more than 6 points but 7.5 or less), level 3 (more than 7.5 points but 9 or less), level 4 (more than 9 points but 10.5 or less) or level 5 (more than 10.5 points).

Braking performance tests [7]

Dry road  41.9 m

Wet road  42.6 m

VEHICLE SPECIFICATION

1st gear ratio	**2nd gear ratio**
3rd gear ratio	**4th gear ratio**
5th gear ratio	**6th gear ratio**
Additional notes	**Airbag position, capacity**

Body rear overhang		**Body type**	MV&1BOX
Chassis number embossing position		**Classification code**	68
Cylinders		**Displacement**	2490
Electric engine type		**Electric engine maximum output**	
Electric engine maximum torque		**Electric engine power**	
Engine maximum power	182PS(134KW)/6000RPM	**Engine maximum torque**	240KG*M(2350NM)/4100RPM
Engine model	2AR-FE	**Frame type**	
Front shaft weight	1080	**Front shock absorber type**	MCPHERSON STRUT COIL SPRING
Front stabilizer type		**Front tires size**	235/50R18 97V
Front tread	1575	**Fuel consumption**	
Fuel tank equipment	75	**Grade**	Z A EDITION
Height	188	**Length**	493
Main brakes type		**Make**	TOYOTA
Maximum speed		**Minimum ground clearance**	
Minimum turning radius	5800	**Model**	VELLFIRE
Model code	DBA-AGH30W	**Mufflers number**	
Rear shaft weight	900	**Rear shock absorber type**	DOUBLE WISHBONE COIL SPRING
Rear stabilizer type		**Rear tires size**	235/50R18 97V
Rear tread	1580mm	**Reverse ratio**	1.751
Riding capacity	7	**Side brakes type**	
Specification code	17977	**Stopping distance**	
Transmission type	AT	**Weight**	1920
Wheel alignment	2WD	**Wheelbase**	3000
Width	185		

AUCTION DATA

Date: 2026-09-29, Auction: TAA Kyushu, Lot #: 359

Date:	2026-09-29	Lot #:	359
Auction name:	TAA Kyushu	Region:	Fukuoka
Make:	TOYOTA	Model:	VELLFIRE
Reg. year:	2016	Mileage (km):	117212
Displacement (cc):	2500	Transmission:	IAT
Color:	BLACK	Model code:	AGH30W
Result:	sold	Auction grade:	4
Problem type:	No problem	Problem scale:	None
Contaminated:	No	Airbag:	OK

Date: 2026-10-10, Auction: USS Kyushu, Lot #: 20257

Date:	2026-10-10	Lot #:	20257
Auction name:	USS Kyushu	Region:	Saga
Make:	TOYOTA	Model:	VELLFIRE
Reg. year:	2016	Mileage (km):	117212
Displacement (cc):	2500	Transmission:	IA
Color:	BLACK	Model code:	AGH30W
Result:	available	Auction grade:	4
Problem type:	No problem	Problem scale:	None
Contaminated:	No	Airbag:	OK

PHOTOS AND AUCTION SHEETS

出品番号	初度登録	車名	ドア形状	グレード	評価点
359	H28年	ヴェルファイア	5W	Z Aエディション	4
	4月	車歴 / 排気量	燃料	型式	外装 / 内装
		自家用 / 2500 cc	ガソリン	DBA-AGH30W	C / C

走行	車検	登録番号	譲渡書類期限
117,212 km	09年04月	佐賀 334ラ15	月 日

シフト	エアコン	外装色		乗車定員	最大積載量
IAT	AAC	クロ		7 人	kg
		カラーNo.	内装色	輸入車	リサイクル預託金
		202	クロ 系		16,550円

後日発送部品

セールスポイント

★オークションデビュー★
アルパイン９インチナビ
クリアランスソナー
両側パワースライドドア
ＬＥＤヘッドランプ
クルーズコントロール

純正装備

ABS エアB アルミ PS PW

注意事項欄

車台番号

AGH30-0067626

諸元

長さ	幅	高さ

検査員記入欄

外装しみ、小傷有り
室内汚れ
室内内張傷
コンソール傷
シート汚れ
ハンドルグリップ不良
ダッシュ板のり付
バンパー下A

事務局よりご案内

キーケース

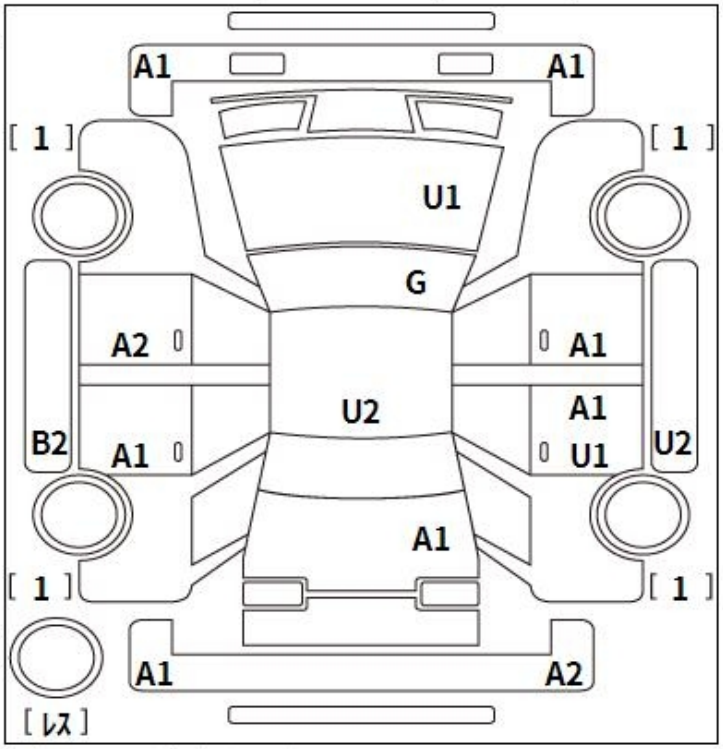

A:ｷｽﾞ U:ﾍｺﾐ B:ｷｽﾞを伴うﾍｺﾐ P:要塗装 W:補修跡 S:錆 C:腐食 G:ﾌﾛﾝﾄｶﾞﾗｽ点ｷｽﾞ XX:交換済み X:要交換 内・外装評価 5段階ﾗﾝｸ順(A・B・C・D・E) 1




VELLFIRE

スライドドアコーナー

20257	車歴(自家用以外は記入)	排気量 2500	型式 DBA-AGH30W		評価点 4
	初度登録年月 H28/4月	車名 トヨタ ヴェルファイア	型式・ドア型 5D	グレード 2.5Z Aエディション	駆動 2WD
					内装 B

車検 R9年 4月 11日	シフト IAT	補正品 SR カワ / 純AW TV / PS ナビ / PW エアB	
走行 117,200 km	冷房 AAC	セールスポイント	
外色 元色 クロ → 色値	カラーNo. 202	アルパイン10インチナビ TV	
燃料 ガソリン	内装色	バックモニター LEDライト	
輸入車用 年式	輸入区分 / ハンドル	スマートキー ETC	
		コーナーセンサー	
		両側パワースライドドア	
リサイクル預託金 16,550円	乗車定員 7人	登録No. 福岡 303 む 7167	
		車台No. AGH30-0067626	
		シリアルNo.	

○注意事項(修復・不具合箇所および状態等)

○検査員報告

ルーム内一部汚れキズ

小キズ小凹

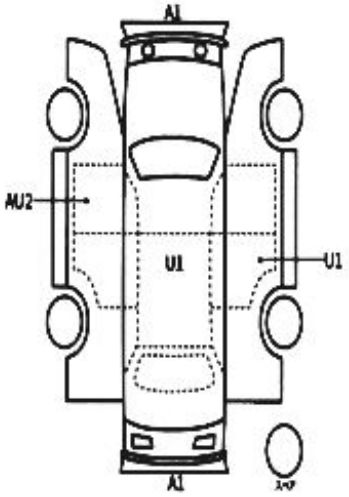

[荷台内寸]約 × × (cm)

長さ 493 cm	幅 185 cm	高さ 188 cm

GLOSSARY

[1] **Chassis number** – a unique identification number of the vehicle in Japan (same as VIN in the USA or Europe)

[2] **Title information:**
Registered – qualified for driving in Japan
Deregistered Temporarily – not qualified for driving in Japan, usually a temporary title during the ownership change
Deregistered Completely – not qualified for driving in Japan, the vehicle is determined to be scrapped
Deregistered to Export – not qualified for driving in Japan , the vehicle is determined to be exported

[3] **Determining the overall collision safety performance evaluation** – For the driver's seat, the results of the full-wrap frontal collision test, offset frontal collision test, and side collision test are added together and evaluated to 6 different levels. For the Frontal passenger's seat, the results of the full-wrap frontal collision test and the side collision test (results for the driver's or the front passenger's seat are used) are added together and evaluated to 6 different levels.

Regular vehicle inspection – All vehicles in Japan must undergo regular vehicle inspections (shaken). New cars need to be tested after three years, and then vehicles must be tested every two years thereafter. A vehicle inspection (shaken) is compulsory for all vehicles with an engine size over 250cc. It ensures that all vehicles on the road are properly maintained and safe to drive. The test also checks that vehicles have not been illegally modified; if they are found to have been modified, they are not allowed on the road.

[4] **Use in the contaminated regions** – The Fukushima Daiichi nuclear disaster was a catastrophic failure at the Fukushima I Nuclear Power Plant on 11 March 2011, resulting in a meltdown of three of the plant's six nuclear reactors. As a result, some areas in the following prefectures were contaminated: Fukushima, Miyagi, Ibaraki, Tochigi.

[5] **Radioactive contamination test** – radioactive contamination inspection that was started in July 2011 as a preventive measure for exporting contaminated vehicles from Japan. The inspection is being conducted since in all sea ports of Japan under the supervision of The Japan Harbor Transportation Association (JHTA).

MLIT – Ministry of Land, Infrastructure, Transport and Tourism.

[6] **Japan New Car Assessment Program** – the Ministry of Land, Infrastructure, Transport and Tourism (MLIT) and the National Agency for Automotive Safety & Victims' Aid (NASVA) have taken measures for safety, one of which is to assess commercially available vehicles through a variety of safety performance tests and release the resulting information compiled into the "New Car Assessment Program". The objective of Japan New Car Assessment Program is to increase the use of safe automobiles by providing an environment in which users can easily select such vehicles. This also promotes the development of safer vehicles by automobile manufacturers. Neck injury protection for rear-end collision performance test , rear seat passenger's protection for frontal collision performance test, rear passenger's seat belt usability evaluation test and seat belt reminder for passengers evaluation test are started in FY2009.

[7] **Braking Performance Tests** – Braking performance is determined by the shortness of the distance in which a vehicle can stop and the stability of the vehicle at the time of braking. This test is performed under wet and dry road conditions for a vehicle which has both a driver and a front passenger. The distance it takes for the vehicle to stop and the stability of the vehicle at the time of braking is evaluated for when the vehicle is stopped abruptly while traveling at a speed of 100km/h. The stopping distance and vehicle speed have been measured by using GPS since FY2009.

CAR VX, LTD DEPENDS ON ITS SOURCES FOR THE ACCURACY AND RELIABILITY OF ITS INFORMATION.

THEREFORE, NO RESPONSIBILITY IS ASSUMED BY CAR VX, LTD OR ITS AGENTS FOR ERRORS OR OMISSIONS IN THIS REPORT. CAR VX, LTD FURTHER EXPRESSLY DISCLAIMS ALL WARRANTIES, EXPRESSED OR IMPLIED, INCLUDING ANY IMPLIED WARRANTIES OF MERCHANTABILITY OR FITNESS FOR A PARTICULAR PURPOSE.

© 2014-2026 Car VX Limited. All rights reserved.