Vehicle History Report

VEHICLE DETAILS

Chassis number [1]:	ANH20-8303788
Manufacture date:	2013-10
Make:	TOYOTA
Model:	VELLFIRE
Body:	DBA-ANH20W
Grade:	Z GOLDEN EYES
Engine:	2AZ-FE
Drive:	2WD
Transmission:	AT

Title information [2]:	**Deregistered to Export**	✓
Accident / Repair:	**No problem**	✓
Odometer rollback:	**No problem**	✓
Manufacturer recall:	**Problem found**	✗
Safety grade [3]:	★★★★★★	✓
Contamination risk:	**No problem**	✓

This CAR VX Vehicle History Report is based only on Information supplied to CAR VX, LTD and available as of 2026-11-04 10:38:10. The information may vary depending on the data received from our data providers. Some data may be incomplete or unavailable due to human error, information that was not digitized at the time, or data that was simply not reported to the databases. This report should be used as a decision-support tool alongside a vehicle inspection and test drive.

ACCIDENT / REPAIR HISTORY

Problem type	Reported	Date reported	Data source	Details	Airbag
Collision	Not reported				
Malfunction	Not reported				
Theft	Not reported				
Fire damage	Not reported				
Water damage	Not reported				
Hail damage	Not reported				

ODOMETER READINGS HISTORY

Date reported	Data source	Odometer reading (Km)
2021-02-06	TAA Hyogo	78589
2021-04-09	USS Nagoya	78693
2022-10-17	MLIT	88600
2024-10-09	MLIT	99900
2026-10-20	CAA Tokyo	121996

USE HISTORY

Use in the contaminated regions [4]	Radioactive contamination test fail [5]	Commercial use
Not reported	Not reported	Not reported

DETAILED HISTORY

Event date	Location	Odometer reading (Km)	Data source	Details
2013-10			TOYOTA	Manufactured
2013-10			MLIT	First registration
2021-02-06		78589	TAA Hyogo	Auctioned

2021-04-09	Aichi	78693	USS Nagoya	Auctioned
2022-10-17		88600	MLIT	Inspection
2024-10-09	Nerima	99900	MLIT	Inspection
2026-10-20	Chiba	121996	CAA Tokyo	Auctioned
2026-10-26	Nerima		MLIT	Last registration

MANUFACTURER RECALL HISTORY

Date reported	Data source	Affected part	Details
2018-03-28	MLIT	Airbag	In the inflator (inflation device) of the passenger airbag, the prevention of moisture absorption of the gas generating agent is inappropriate, so that the gas generating agent may deteriorate due to repeated changes in temperature and humidity. For this reason, the inflator container may be damaged when the airbag is deployed.

*CAR VX Reports provide comprehensive information on all reported recalls, covering both open and closed cases. To determine whether any open recalls listed in the report apply to a specific vehicle, the manufacturer or an authorized dealer/workshop should be contacted directly. Alternatively, a request may be submitted through the CONTACT US form, and CAR VX will then confirm the current status of each listed recall.

VEHICLE ASSESSMENT [6]

Overall Collision Safety Ratings

Driver's seat			Front passenger's seat		
Points	Evaluation	Goal average	Points	Evaluation	Goal average
34.46	★★★★★★	96%	23.51	★★★★★★	98%

* In order to accurately differentiate between the evaluations of different vehicles, a standard is set based on current technology. Up to 6 points out of 12 is given level 1 and the rest of the range is divided up into equal parts, which are respectively assigned to level 2 (more than 6 points but 7.5 or less), level 3 (more than 7.5 points but 9 or less), level 4 (more than 9 points but 10.5 or less) or level 5 (more than 10.5 points).

Braking performance tests [7]

Dry road  41.7 m

Wet road		47.1 m

VEHICLE SPECIFICATION

1st gear ratio	2.396 ~ 0.428(MANUAL MODE ATTACHING): CONTINUOUSLY VARIABLE TRANSMISSION	**2nd gear ratio**	-
3rd gear ratio	-	**4th gear ratio**	-
5th gear ratio	-	**6th gear ratio**	-
Additional notes	NFXSK	**Airbag position, capacity**	
Body rear overhang	1015	**Body type**	MV&1BOX
Chassis number embossing position		**Classification code**	0467
Cylinders		**Displacement**	2360
Electric engine type	-	**Electric engine maximum output**	-
Electric engine maximum torque	-	**Electric engine power**	-
Engine maximum power	170ps(125kW)/6000rpm	**Engine maximum torque**	22.8kg·m(224N·m)/4000rpm
Engine model	2AZ-FE	**Frame type**	SOLID STRUCTURE
Front shaft weight	1050	**Front shock absorber type**	
Front stabilizer type	TORSION BAR TYPE	**Front tires size**	235/50R18 97V
Front tread	1.555	**Fuel consumption**	-
Fuel tank equipment	65	**Grade**	Z GOLDEN EYES
Height	1.900	**Length**	4.885
Main brakes type	HYDRAULIC TYPE, FRONT: DISK BACK: DISK	**Make**	TOYOTA

Maximum speed	180	**Minimum ground clearance**	0.160 0.170
Minimum turning radius	5.9	**Model**	VELLFIRE
Model code	DBA-ANH20W	**Mufflers number**	
Rear shaft weight	850	**Rear shock absorber type**	
Rear stabilizer type	-	**Rear tires size**	235/50R18 97V
Rear tread	1.560	**Reverse ratio**	1.668
Riding capacity	7	**Side brakes type**	
Specification code	16086	**Stopping distance**	50(100)
Transmission type	AT	**Weight**	1900
Wheel alignment	2WD	**Wheelbase**	2.950
Width	1.840		

AUCTION DATA

Date: 2021-02-06, Auction: TAA Hyogo, Lot #: 2044

Date:	2021-02-06	Lot #:	2044
Auction name:	TAA Hyogo	Region:	
Make:	TOYOTA	Model:	VELLFIRE
Reg. year:	2013	Mileage (km):	78589
Displacement (cc):	2400	Transmission:	IAT
Color:	BLACK	Model code:	ANH20W
Result:	sold	Auction grade:	4
Problem type:	No problem	Problem scale:	None
Contaminated:	No	Airbag:	OK

Date: 2021-04-09, Auction: USS Nagoya, Lot #: 35018

Date:	2021-04-09	Lot #:	35018
Auction name:	USS Nagoya	Region:	Aichi
Make:	TOYOTA	Model:	VELLFIRE
Reg. year:	2013	Mileage (km):	78693
Displacement (cc):	2400	Transmission:	AT
Color:	BLACK	Model code:	ANH20W
Result:	available	Auction grade:	4.5
Problem type:	No problem	Problem scale:	None
Contaminated:	No	Airbag:	OK

Date: 2026-10-20, Auction: CAA Tokyo, Lot #: 30552

Date:	2026-10-20	Lot #:	30552
Auction name:	CAA Tokyo	Region:	Chiba
Make:	TOYOTA	Model:	VELLFIRE
Reg. year:	2013	Mileage (km):	121996
Displacement (cc):	2400	Transmission:	IAT
Color:	BLACK	Model code:	ANH20W
Result:	sold	Auction grade:	4
Problem type:	No problem	Problem scale:	None
Contaminated:	No	Airbag:	OK

PHOTOS AND AUCTION SHEETS

出品番号	初度登録	車名	ドア形状	グレード	評価点
2044	H25年	ヴェルファイア	5W	2.4Z ゴールデンアイズ	4
	10月	車歴 自家用 / 排気量 2400 cc	燃料 ガソリン	型式 DBA-ANH20W	外装 C / 内装 C

走行	車検	登録番号	名変期限
78,589 km	04年10月	神戸 331ﾁ2521	月 日

シフト	エアコン	外装色	乗車定員	最大積載量
IAT	WAC	クロ	7 人	kg

カラーNo.	内装色	輸入車	リサイクル預託金
202	クロ 系		16,260円

セールスポイント

★オークションデビュー★

後日発送部品

純正装備

ABS エアB PS PW

注意事項欄

車台番号

ANH20-8303788

諸元

長さ	幅	高さ

検査員記入欄

外装のり付
外装うすい線キズ
下廻りＡＵ
室内汚れ
室内内張傷
コンソール傷
コンソールのり付
ダッシュ板のり跡
シフトノブすれ
バンパー下Ａ
社外アルミホイール

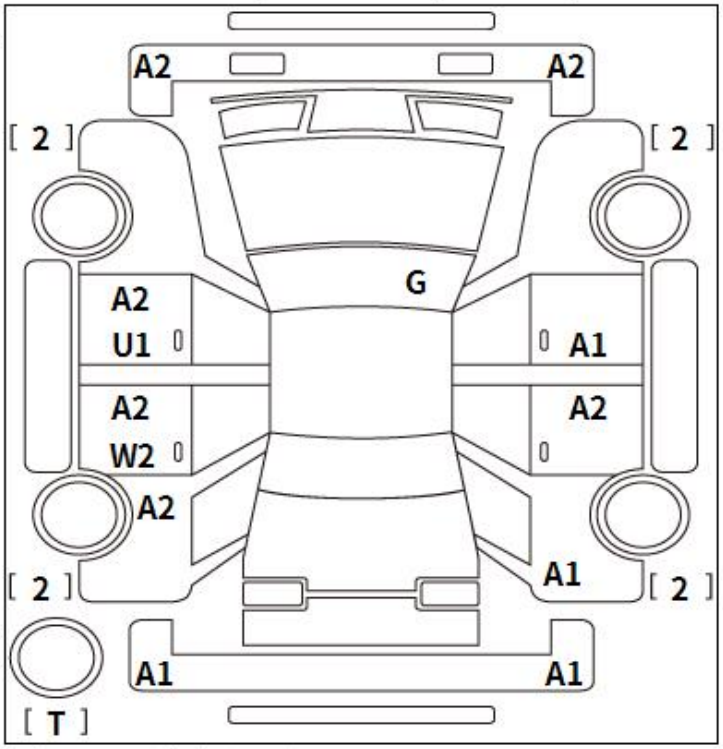

事務局よりご案内

こちらのお車は陸送費10%相当割引対象車です！
（TAA兵庫事務局手配に限ります）

A:ｷｽﾞ U:ﾍｺﾐ B:ｷｽﾞを伴うﾍｺﾐ P:要塗装 W:補修跡 S:錆 C:腐食 G:ﾌﾛﾝﾄｶﾞﾗｽ点ｷｽﾞ XX:交換済み X:要交換 内・外装評価 5段階ﾗﾝｸ順(A・B・C・D・E) 1


神戸331
ち 25-21


Local Motion
神戸331
ち 25-21

ゴールデンコーナー

No.	車種（自家用以外は記入）	排気量	型式	評価点
35018		2400	DBA-ANH20W	4.5

初度登録年月	車名	形状・ドア数	グレード		内装
25/10月	ヴェルファイア	5W	2.4Z ゴールデンアイズ	2WD / 4WD	B

車検 R4 年 10/20 月	シフト IAT	純正品	SR / AW / RS / RW / カ / TV / ナビ / エアB
走行 78,693 マイル	冷房 WAAC	セールスポイント	★アルパイン大型ナビ（フルセグ） ★ 7 フリップダウンモニター ★ パワーバックドア、Bカメラ ★ 両側パワースライドドア ★ ハーフレザーシート
外色 元色 ワロ 色替	カラー No. 202		
燃料 ガソリン・軽油・( )	内装色		
輸入車用 年式	輸入送り ハンドル ディーラー・並行 左・右	名義変更期限 月 日	

リサイクル預託金 16,260 円	標準定員 人	積載量 1	登録No. 三重 502 ミ 9004
			車台No. ANH20-8303788
			シリアルNo.

◎注意事項（保留・不具合箇所および状態等）

自 取説、保証書、ナビ取扱説
地図SD後日!!

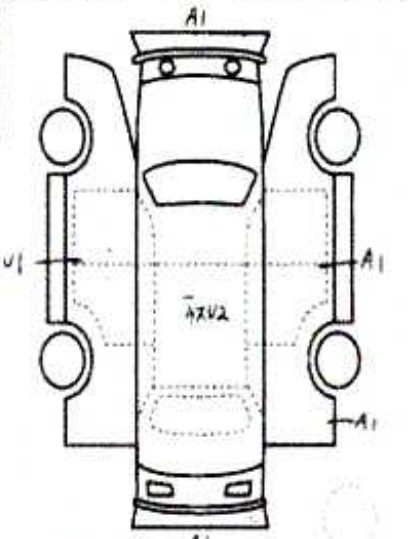

◎検査員報告（USS使用欄）

ちょっ板ハガト
ルーム内擦ぼしまだ
小まだ小口

【荷台内寸】約 × × (cm)

長さ 488 cm 幅 184 cm 高さ 190 cm ←（車検証上の寸法）

スペア







出品番号	初度登録	車名	ドア形状	グレード	評価点
30552	H25年	ヴェルファイア	5W	2.4Z ゴールデンアイズ	4
初出品	10月	車歴: 自家用 / 排気量: 2400 cc	燃料: ガソリン	型式: DBA-ANH20W	外装: C / 内装: B

走行	車検	登録番号	譲渡書類期限
121,996 km	年 月		月 日

シフト	エアコン	外装色	乗車定員	最大積載量
IAT	AAC	ブラック	7 人	kg

カラーNo.	内装色	輸入車	リサイクル預託金
202	系		16,260円

後日発送部品

セールスポイント

★ユーザー買取車
★アルパインナビ！★地デジTV
★両側パワースライドドア、
★パワーバックドア
★クルーズコントロール

純正装備

エアB PS PW

注意事項欄

車台番号

ANH20-8303788

諸元

長さ	幅	高さ
488	184	190

検査員記入欄

室内薄汚れ
Rスポイラー色あせ
外装小傷有り
外天張モニター取付

事務局よりご案内

SDケース

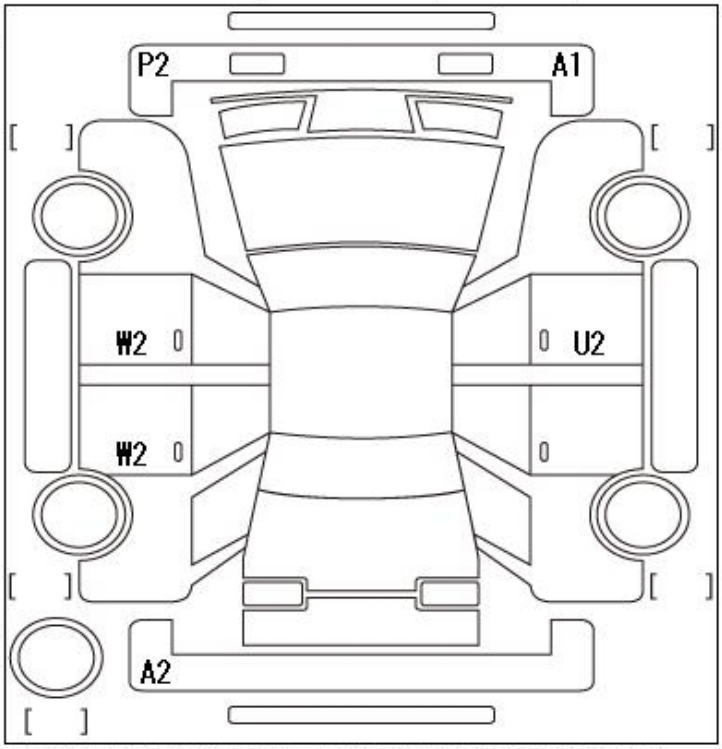

A:キズ U:ヘコミ B:キズを伴うヘコミ P:要塗装 W:補修跡 S:錆 C:腐食、穴 G:フロントガラス点キズ XX:交換済み X:要交換 欠:欠品 内・外装評価 5段階ランク順(A・B・C・D・E) 2



















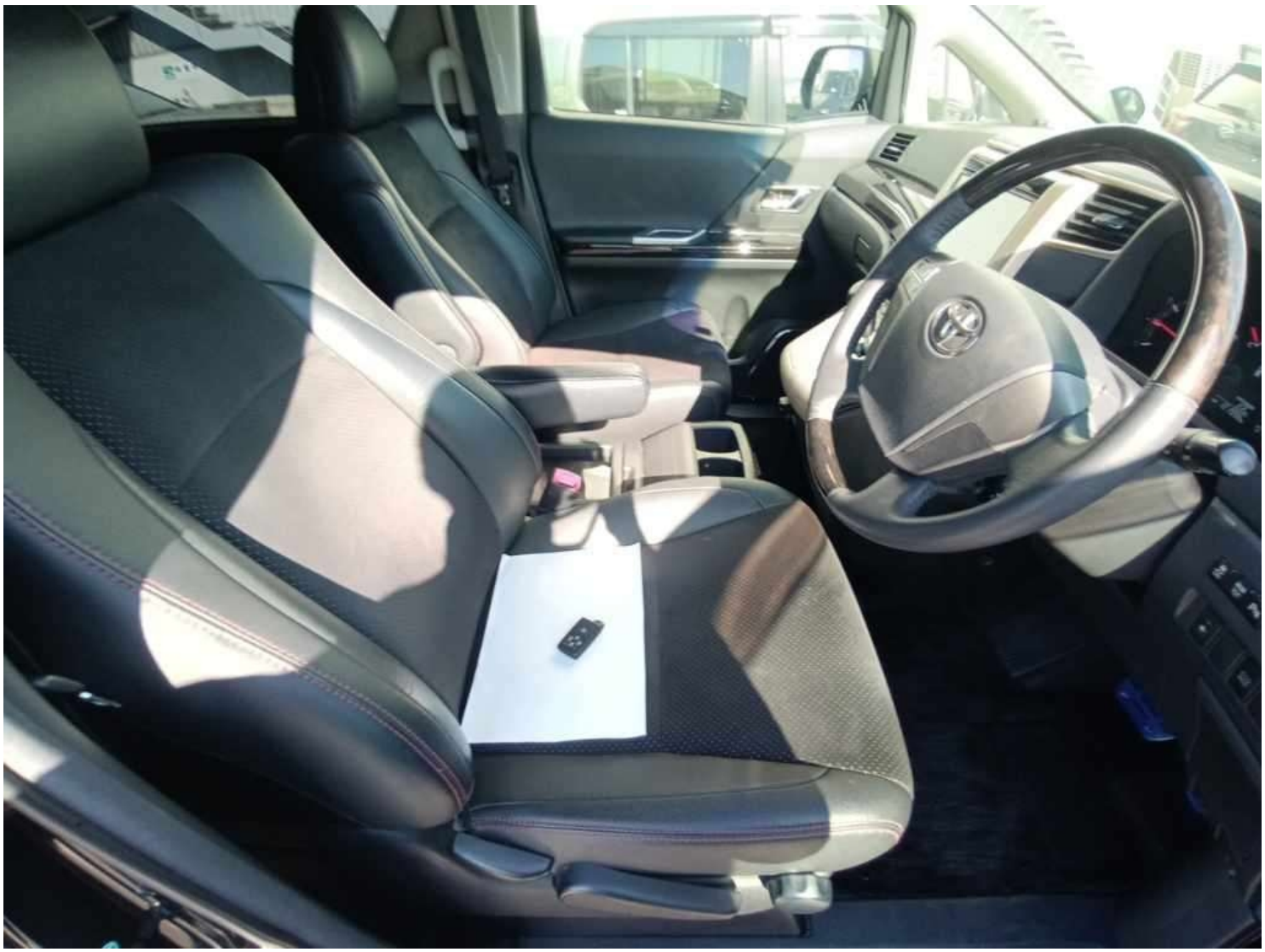


VELLFIRE

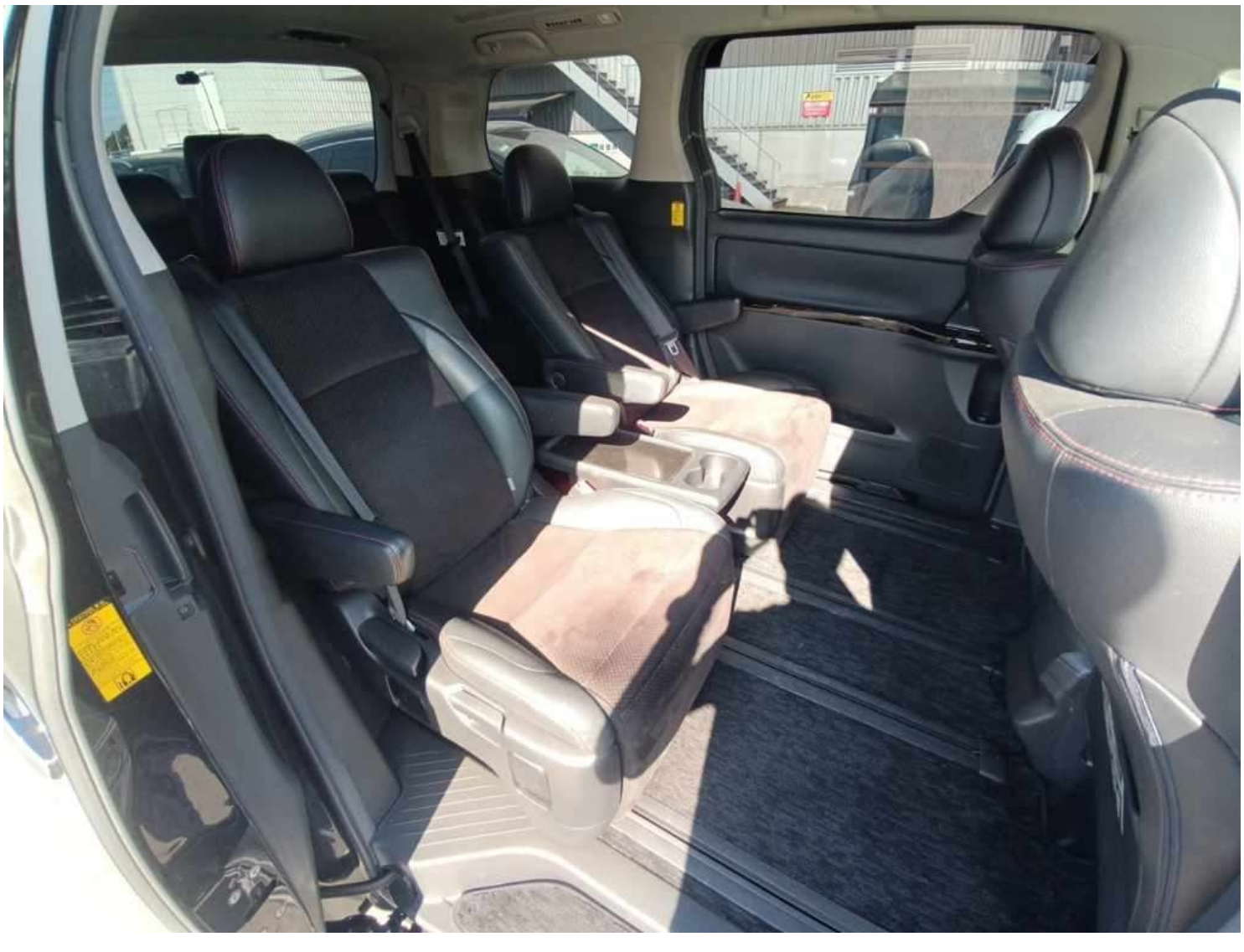

GLOSSARY

[1] **Chassis number** – a unique identification number of the vehicle in Japan (same as VIN in the USA or Europe)

[2] **Title information:**
Registered – qualified for driving in Japan
Deregistered Temporarily – not qualified for driving in Japan, usually a temporary title during the ownership change
Deregistered Completely – not qualified for driving in Japan, the vehicle is determined to be scrapped
Deregistered to Export – not qualified for driving in Japan , the vehicle is determined to be exported

[3] **Determining the overall collision safety performance evaluation** – For the driver's seat, the results of the full-wrap frontal collision test, offset frontal collision test, and side collision test are added together and evaluated to 6 different levels. For the Frontal passenger's seat, the results of the full-wrap frontal collision test and the side collision test (results for the driver's or the front passenger's seat are used) are added together and evaluated to 6 different levels.

Regular vehicle inspection – All vehicles in Japan must undergo regular vehicle inspections (shaken). New cars need to be tested after three years, and then vehicles must be tested every two years thereafter. A vehicle inspection (shaken) is compulsory for all vehicles with an engine size over 250cc. It ensures that all vehicles on the road are properly maintained and safe to drive. The test also checks that vehicles have not been illegally modified; if they are found to have been modified, they are not allowed on the road.

[4] **Use in the contaminated regions** – The Fukushima Daiichi nuclear disaster was a catastrophic failure at the Fukushima I Nuclear Power Plant on 11 March 2011, resulting in a meltdown of three of the plant's six nuclear reactors. As a result, some areas in the following prefectures were contaminated: Fukushima, Miyagi, Ibaraki, Tochigi.

[5] **Radioactive contamination test** – radioactive contamination inspection that was started in July 2011 as a preventive measure for exporting contaminated vehicles from Japan. The inspection is being conducted since in all sea ports of Japan under the supervision of The Japan Harbor Transportation Association (JHTA).

MLIT – Ministry of Land, Infrastructure, Transport and Tourism.

[6] **Japan New Car Assessment Program** – the Ministry of Land, Infrastructure, Transport and Tourism (MLIT) and the National Agency for Automotive Safety & Victims' Aid (NASVA) have taken measures for safety, one of which is to assess commercially available vehicles through a variety of safety performance tests and release the resulting information compiled into the "New Car Assessment Program". The objective of Japan New Car Assessment Program is to increase the use of safe automobiles by providing an environment in which users can easily select such vehicles. This also promotes the development of safer vehicles by automobile manufacturers. Neck injury protection for rear-end collision performance test , rear seat passenger's protection for frontal collision performance test, rear passenger's seat belt usability evaluation test and seat belt reminder for passengers evaluation test are started in FY2009.

[7] **Braking Performance Tests** – Braking performance is determined by the shortness of the distance in which a vehicle can stop and the stability of the vehicle at the time of braking. This test is performed under wet and dry road conditions for a vehicle which has both a driver and a front passenger. The distance it takes for the vehicle to stop and the stability of the vehicle at the time of braking is evaluated for when the vehicle is stopped abruptly while traveling at a speed of 100km/h. The stopping distance and vehicle speed have been measured by using GPS since FY2009.

CAR VX, LTD DEPENDS ON ITS SOURCES FOR THE ACCURACY AND RELIABILITY OF ITS INFORMATION.

THEREFORE, NO RESPONSIBILITY IS ASSUMED BY CAR VX, LTD OR ITS AGENTS FOR ERRORS OR OMISSIONS IN THIS REPORT. CAR VX, LTD FURTHER EXPRESSLY DISCLAIMS ALL WARRANTIES, EXPRESSED OR IMPLIED, INCLUDING ANY IMPLIED WARRANTIES OF MERCHANTABILITY OR FITNESS FOR A PARTICULAR PURPOSE.

© 2014-2026 Car VX Limited. All rights reserved.